This document is the absolute property of DOMAX Sp. z o.o. This document must not be copied without the written permission of DOMAX Sp. z o.o. The contents thereof must not be disclosed to a third party nor be used for any unauthorized purpose. Contravention will be prosecuted.

Revsion				
Rev.	Explanation	Data	Revised by	Approved by

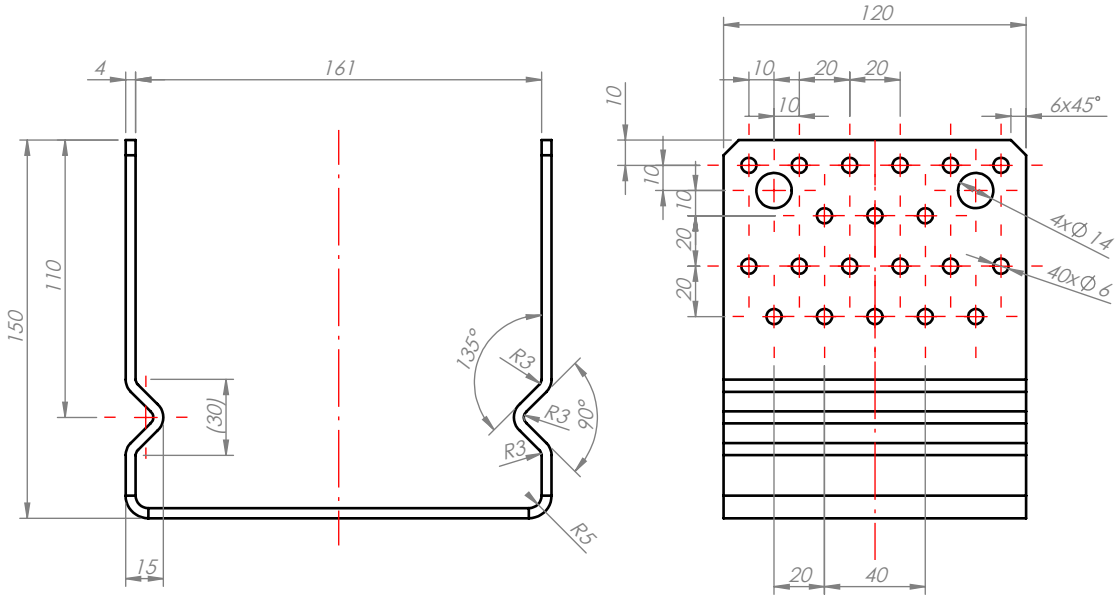

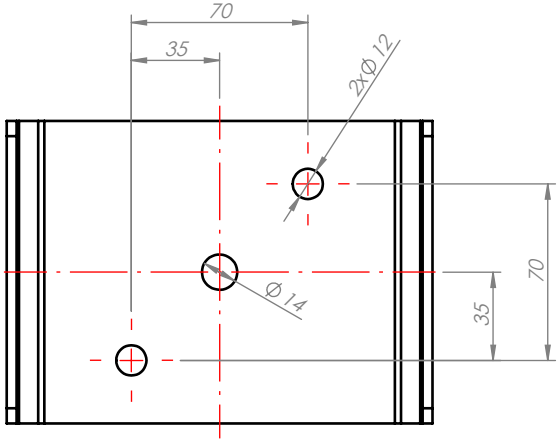

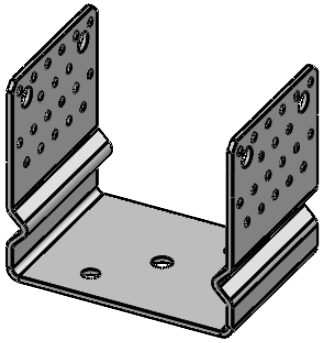

Note:
1. General tolerances EN 22768 mK.
2. Hot dip galvanized acc to EN ISO 1461.

Design: D. Kozłowski	Checked: -		Approved: -	Note: 11.76 dm^2
Drawn: D.Kozłowski	Format: A4	Scale: 1:3	Material: S235	Weight: 1.70 kg
Index: 480996	Date: 20.03.2023	Plate		Sheet 1/1
domax DOMAX Sp. z o.o.		-		
		PSSOZ 160		Rev 0